Pseudo Dry Gas System

An enabling technology for remote gas fields

28th September 2017

Lee Thomas
Laura Liebana

Advisian
WorleyParsons Group

INTECSEA
WorleyParsons Group

www.**advisian**.com

www.**intecsea**.com

Objective

- Present an innovative Pseudo Dry Gas (PDG) separation technology to demonstrate that tie backs far in excess of the current threshold distance can be achieved.

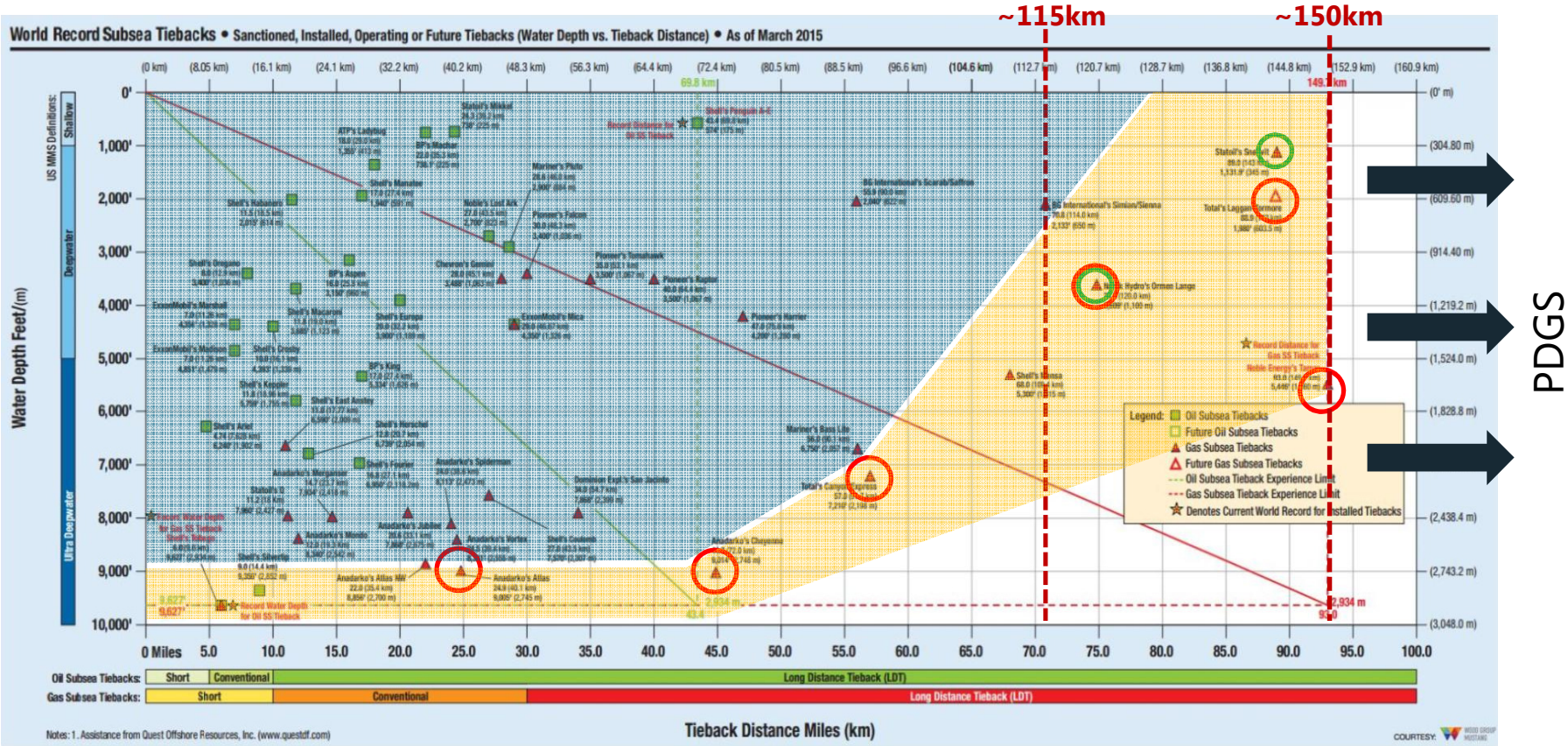

PDGS

Challenge

- Increasing back-pressure generated by a combination of increasing frictional and gravitational pressure drop. The gravitational pressure drop is due to increasing liquid content in the pipeline condensed from the gas as it is transported, resulting in a regressive cycle with ever lower returns the further the subsea tie-back is extended.

Figure 1 - Fixed Flowrate

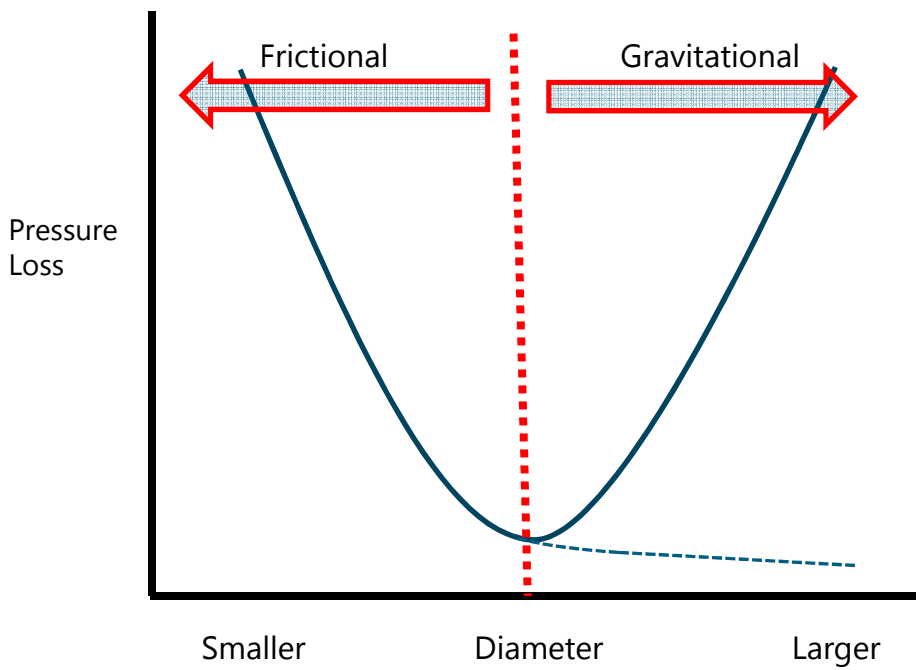

Figure 2- Fixed Diameter

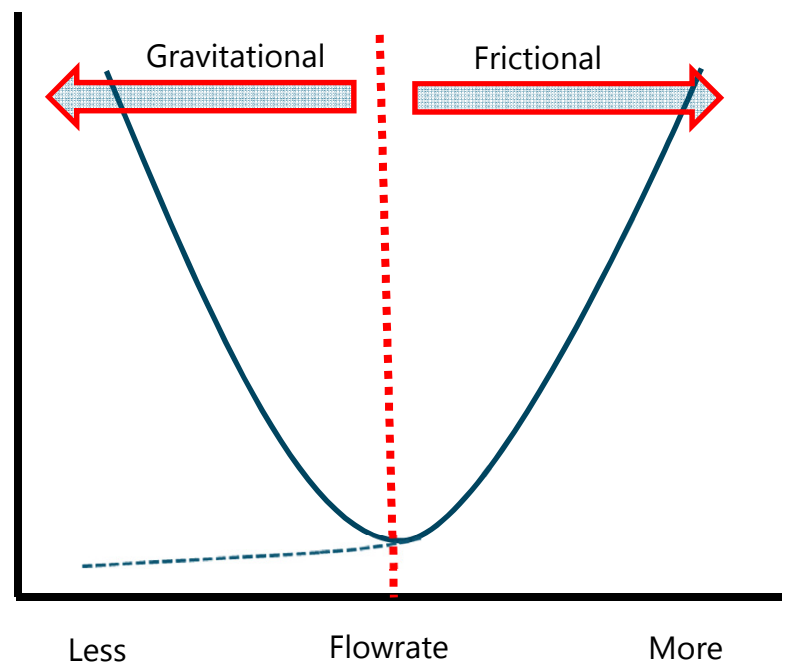

Solution

- Multiple compact (in-line) piggable separators are used to remove liquids generated by the well and condensing from the gas during transportation. This coupled with small single phase centrifugal pumps, allows significantly larger pipeline diameters to be used by eliminating the gravitational pressure loss mechanism from the system.

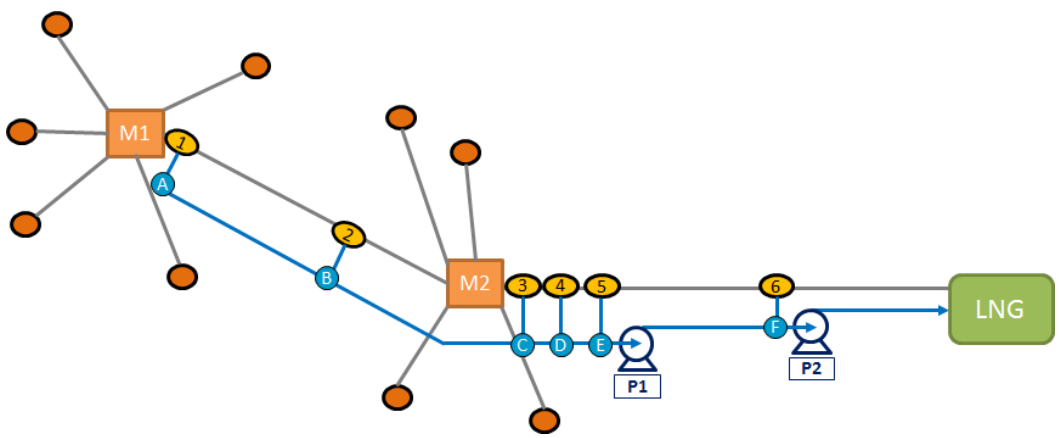

Coal Seam Gas - Overview

- Drain points are a proven solution for Coal Seam Gas gathering networks in Queensland Australia

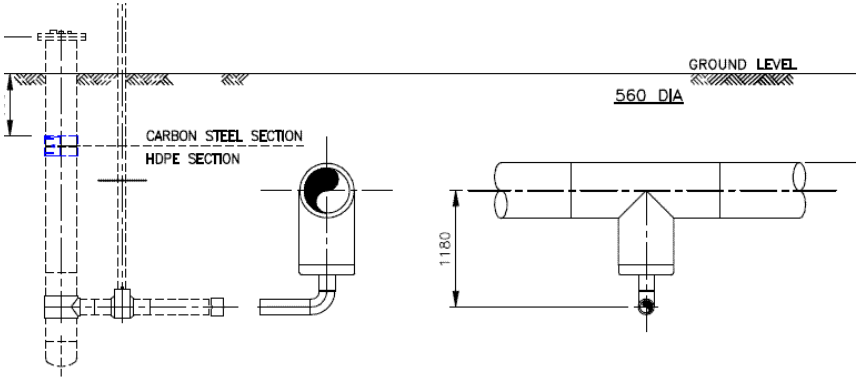

Coal Seam Gas - Overview

Pressure (KPa)	Wet Gas	Dry Gas	Wet Gas (LPDs)
P_{drop}	133	18	22

Increased pressure drop is caused by water

Separators added to simulate Drains

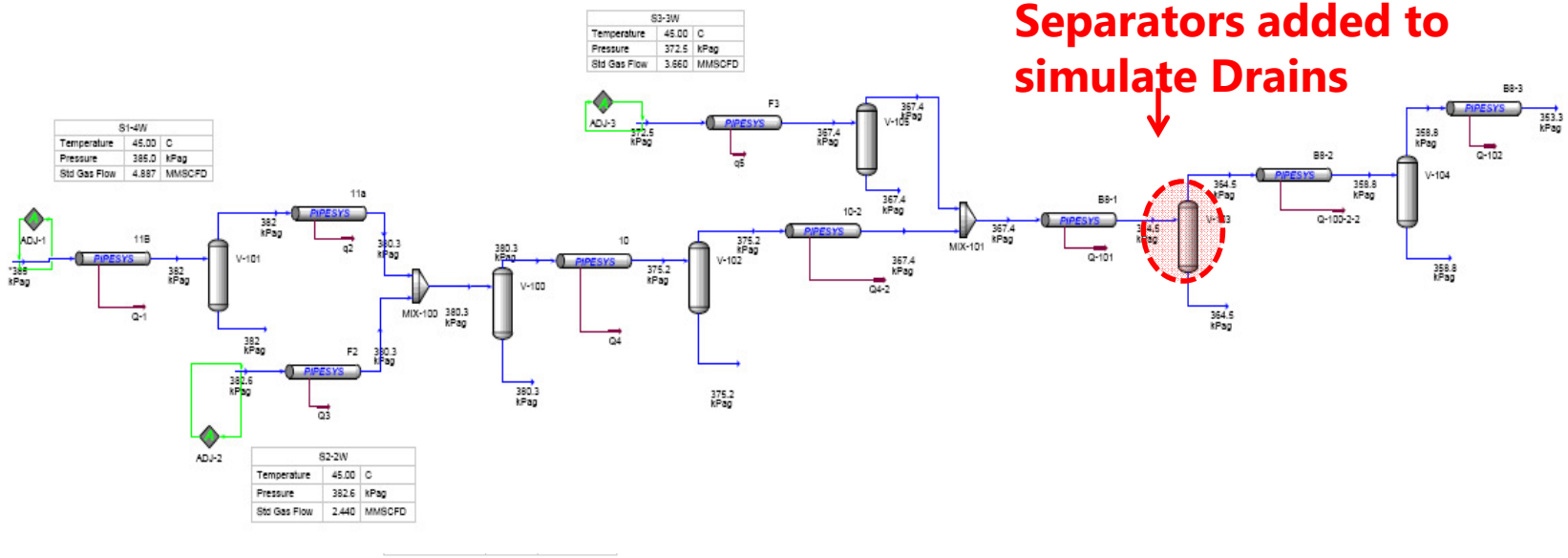

Case Study - Context

- Typical subsea gas gathering and export system; with and without PDGS.
- Trunkline (170km long; WD 0-1800m), with two manifolds and 9 satellite wells (Furthest well at 187km away from shore)

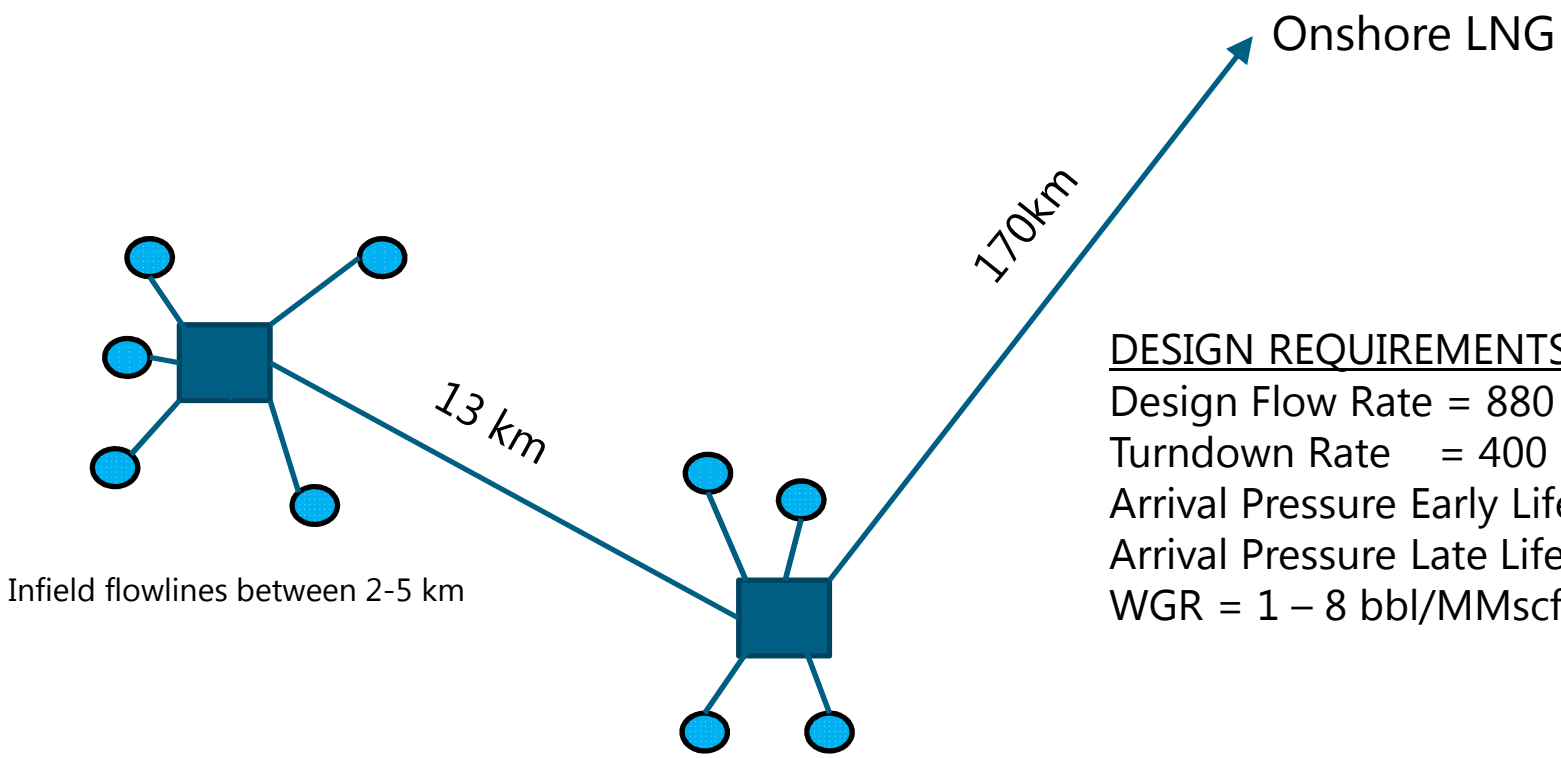

DESIGN REQUIREMENTS
Design Flow Rate = 880 MMscfd
Turndown Rate = 400 MMscfd
Arrival Pressure Early Life = 60 bara
Arrival Pressure Late Life = 30 bara
WGR = 1 – 8 bbl/MMscf

Pipeline Sizing

- Line size selection (30”) driven by liquid holdup at turndown

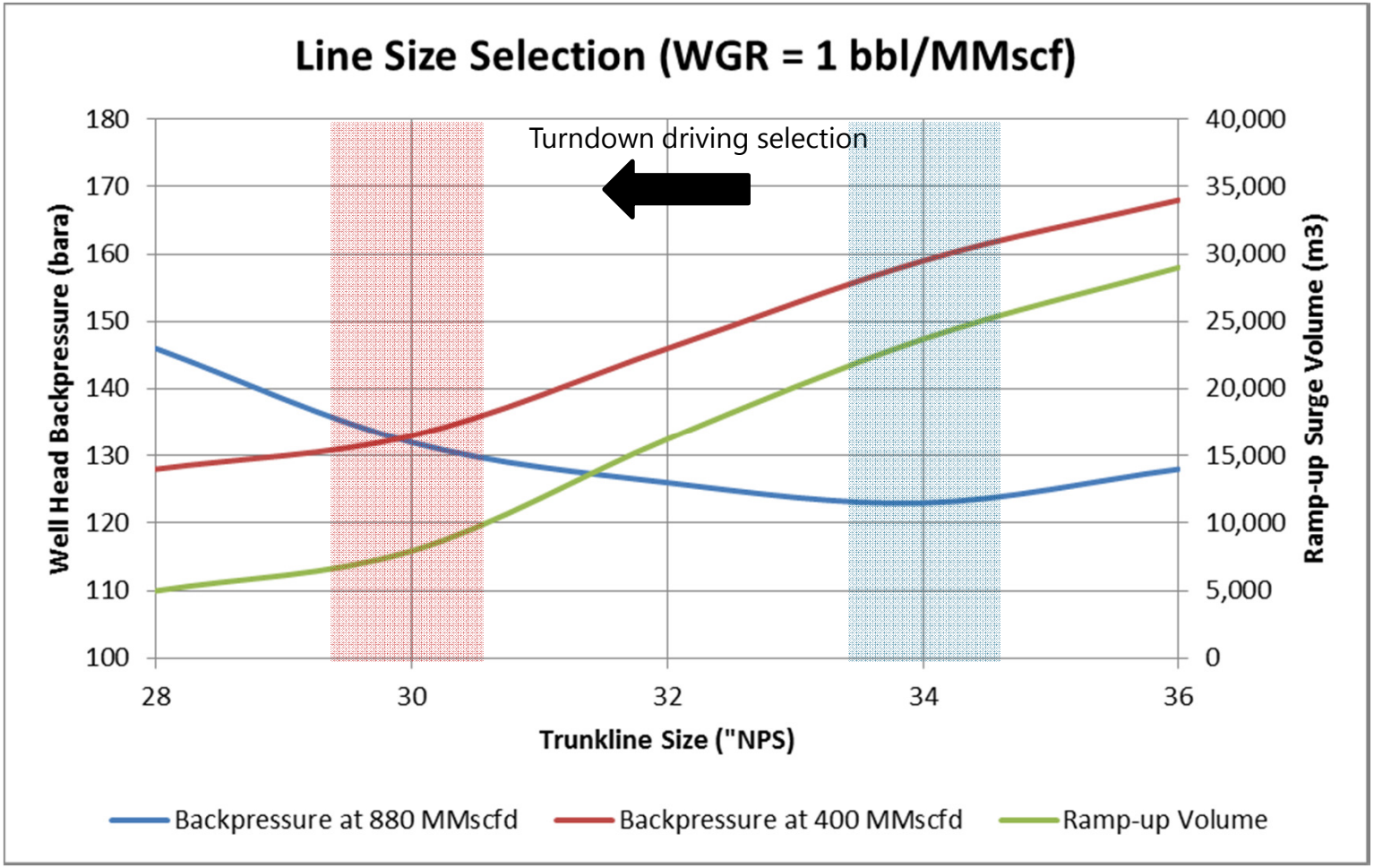

Water Production Impact

Trunkline Size (")	Case	WGR (bbl/MMscf)	WH Back Pressure (bara)
30	P_{SHORE} 60bar & 880MMscfd	1	132
	P_{SHORE} 30bar & 880 MMscfd		116
	P_{SHORE} 60bar & 880MMscfd	8	150
	P_{SHORE} 30bar & 880MMscfd		132

ΔP = 16 – 18 bar @ 880 MMscfd

More at turndown

Production Impact

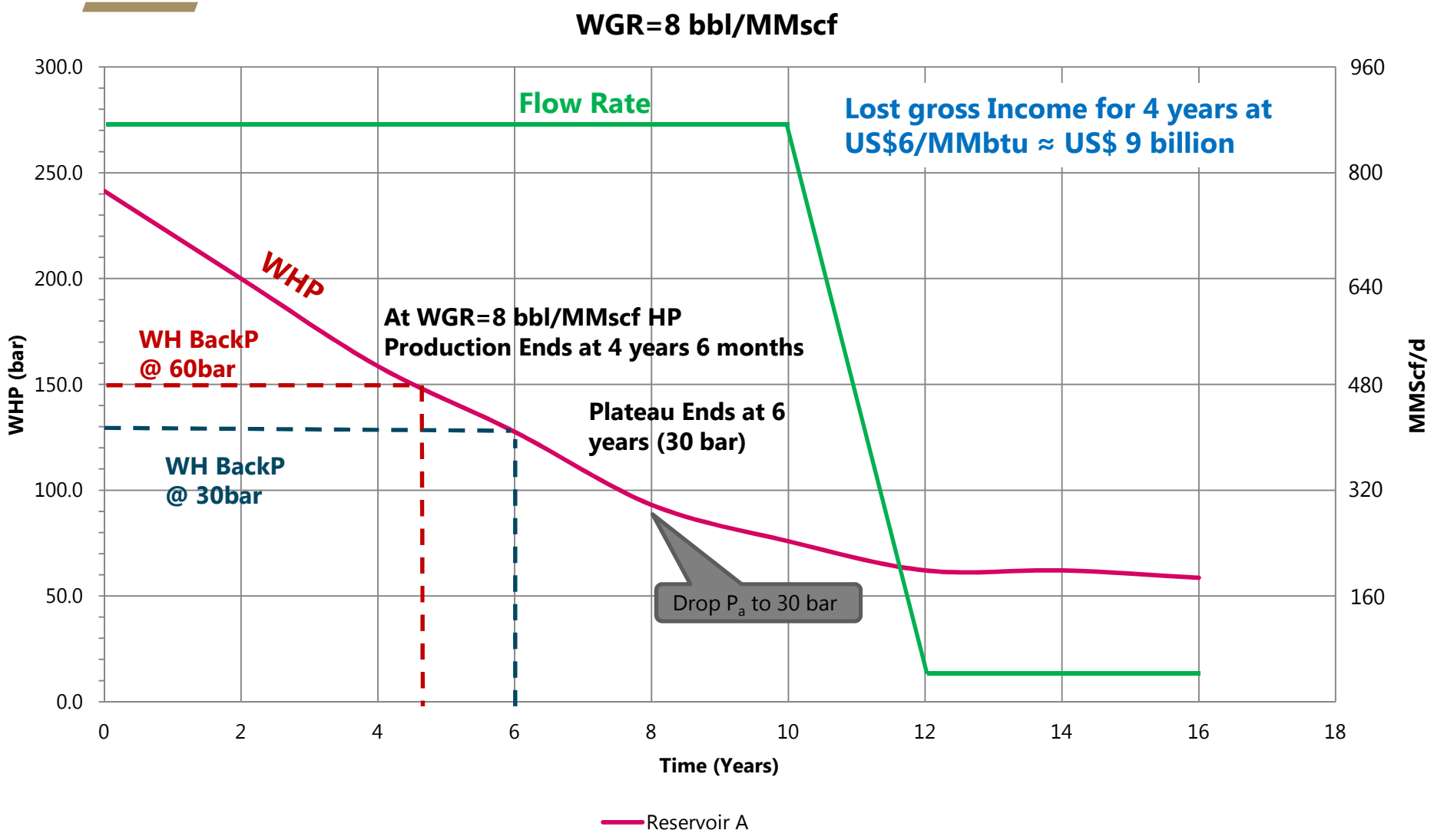

PDG System Design Methodology

- Standard subsea tieback approach:
  - Liquid holdup dictates sizing
  - Shortened plateau period
- Solution is to remove liquid phase:
  - Pipeline sizing not constrained by fluid management (pipeline diameter is only limited by installation / economic constraints)
  - Flow assurance used to determine optimal placement PDG separators. The design considers:

    - Temperature profiles (design and turndown)

    - Terrain, liquid hold up and flow regime

    - Transient cases, i.e. shutdowns and start-ups

    - Installation constraints

PDGS Placement

- PDGS screening methodology determined 6 PDGS units required in the configuration below
- Separation efficiency predicted to be 90% for all separators

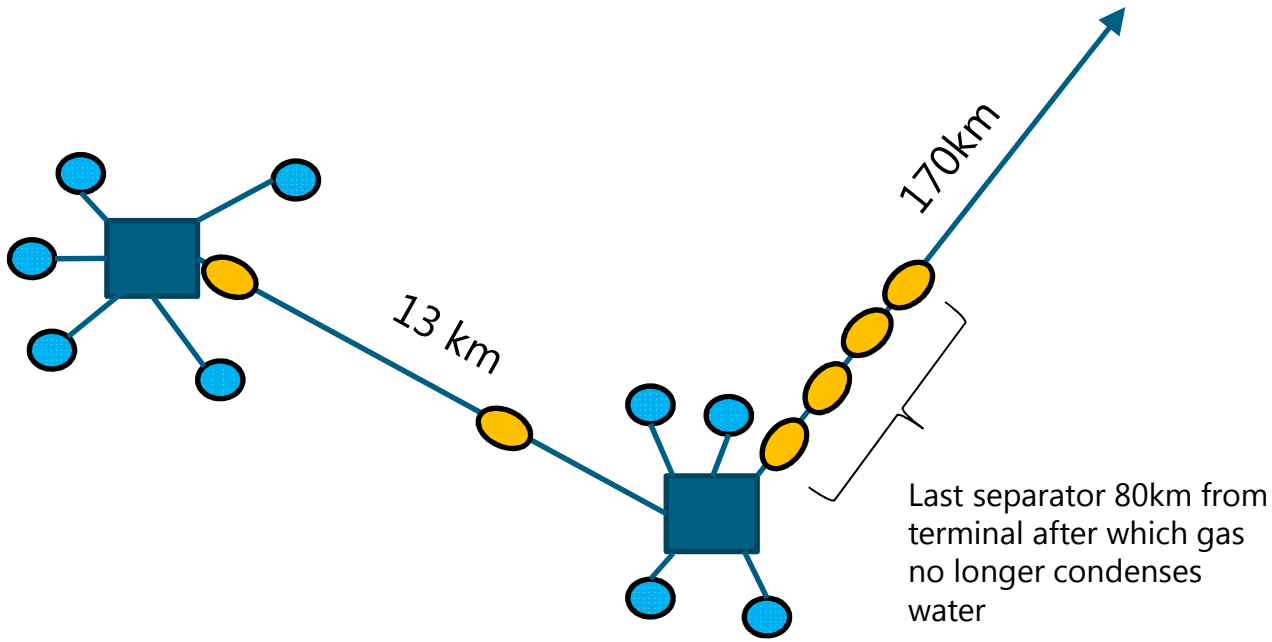

PDGS Enabled Tie-back Hydraulics

- PDGS allows for line size selection to optimise backpressure → 36"
- PDGS backpressure as per dry gas system (30 – 60 bar reduction in backpressure)

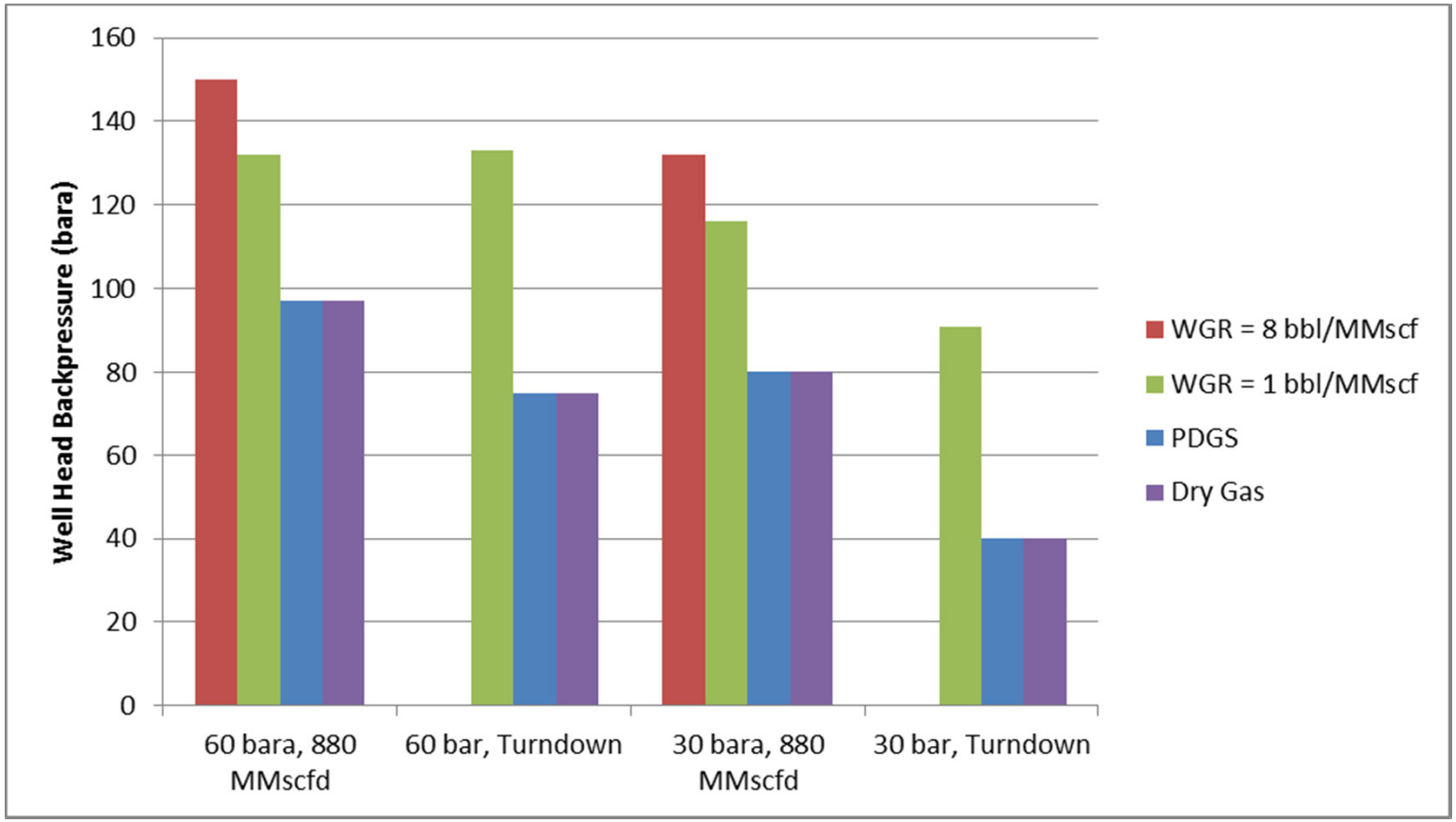

PDGS Enabled Tie-back – Production Impact

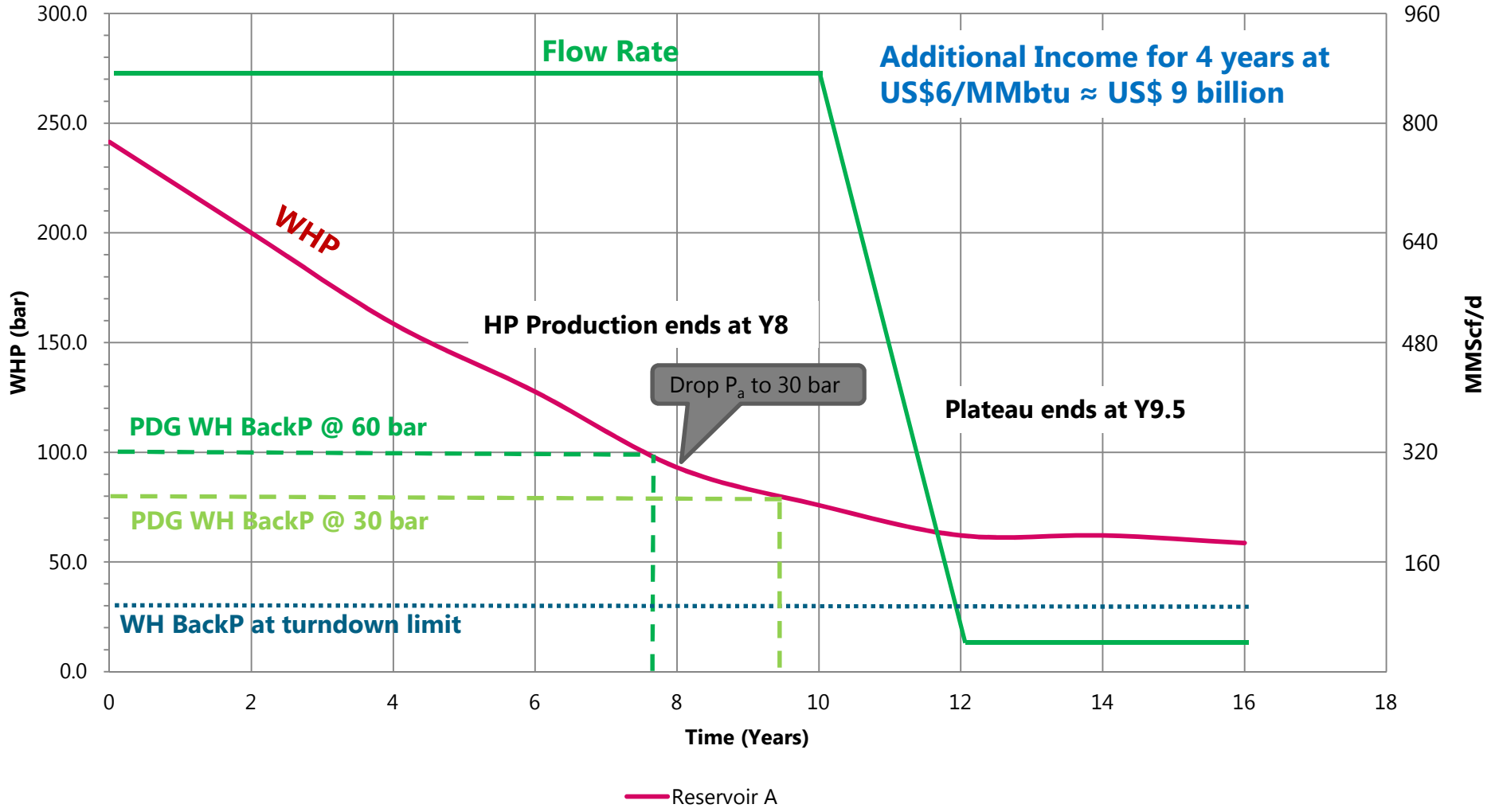

Economic Advantage

- With PDG system implementation, CAPEX intensive structures can be removed without impacting recoverable reserves and significantly reducing upfront cost, which improves the overall NPV / IRR of the potential project.
- Power requirements are measured in Kilowatts – lower OPEX.
- Also - HSE benefit of removing manned structures.

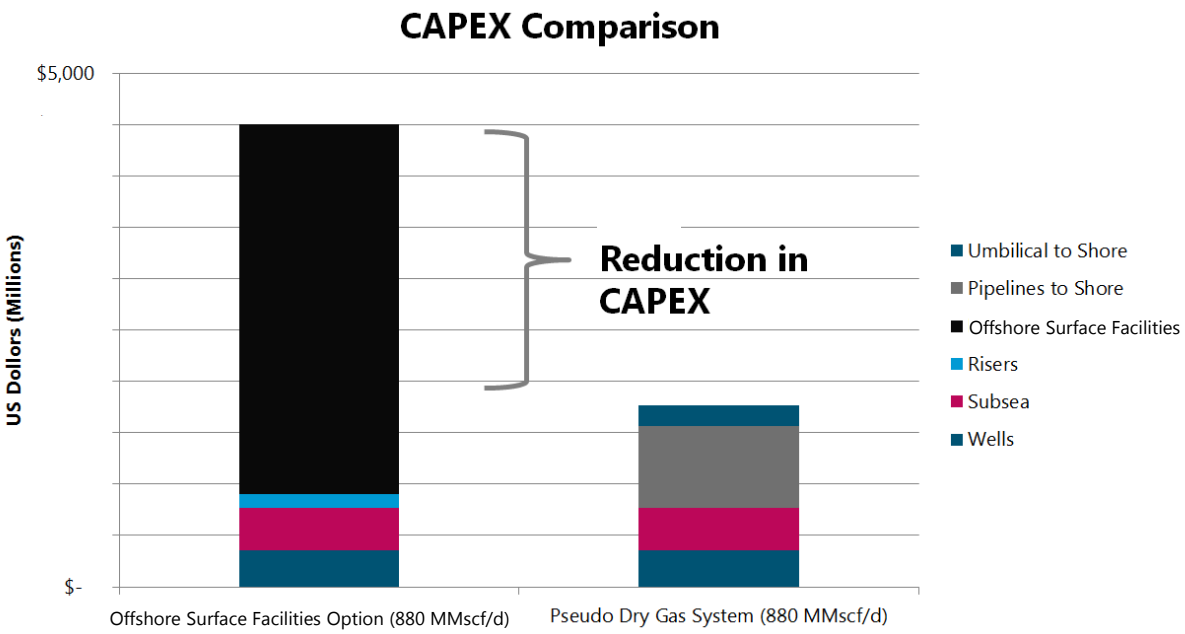

Case Study – 190 km from shore – PDGS reduction in CAPEX upwards of 40-60% over alternative concept with surface facilities

Conclusion

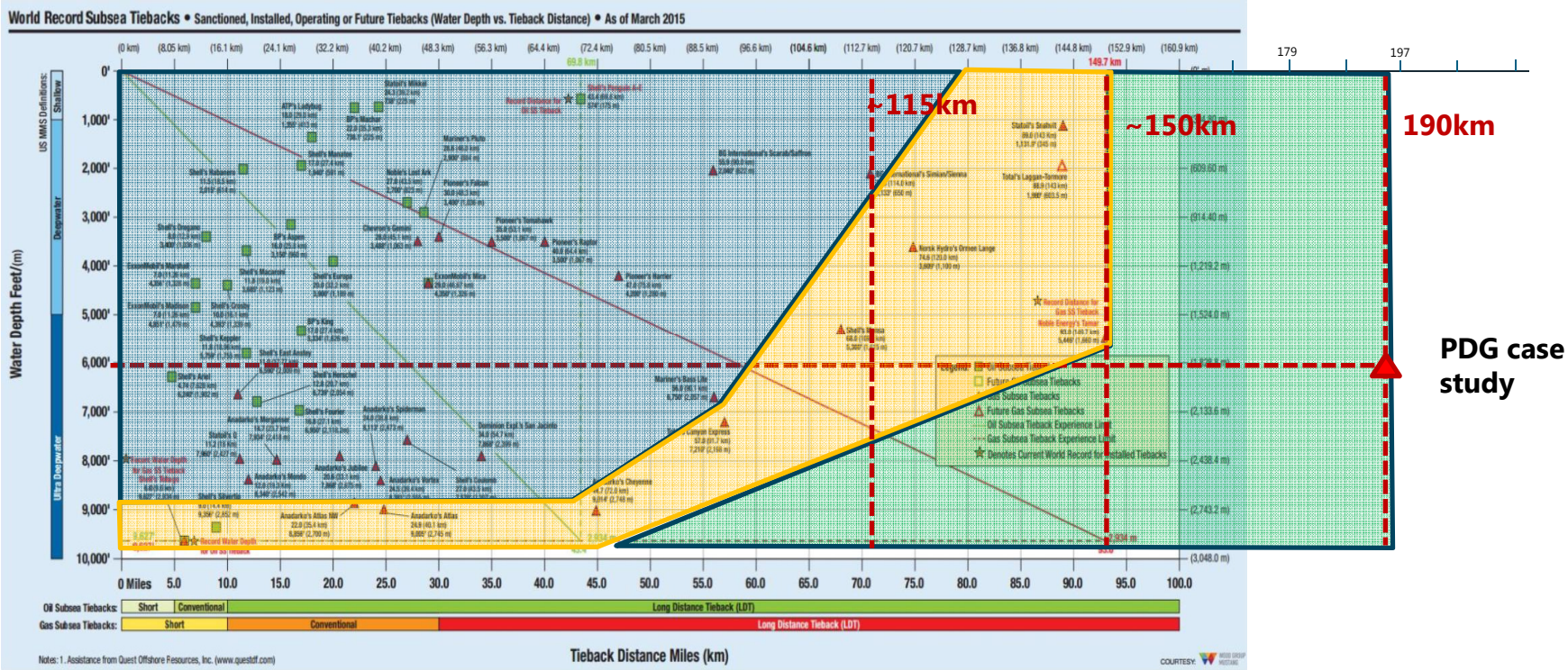
World Record Subsea Tiebacks • Sanctioned, Installed, Operating or Future Tiebacks (Water Depth vs. Tieback Distance) • As of March 2015
Water Depth Feet/(m)
Tieback Distance Miles (km)
Oil Subsea Tiebacks:
Gas Subsea Tiebacks:
Short
Conventional
Long Distance Tieback (LDT)
~115km
~150km
190km
179
197
PDG case study

Application

Reduce cost, remove turndown constraints, increase recovery

Greenfield

- Current practice is to assume subsea gas compression or floating compression systems to produce from remote areas. A direct long distance tie-back can now be considered in concept evaluation.

Brownfield

- Enabler - a larger radius can be considered for tie-back of satellite or remote fields into hub platforms or to landfall. The value of an existing asset can therefore be improved.

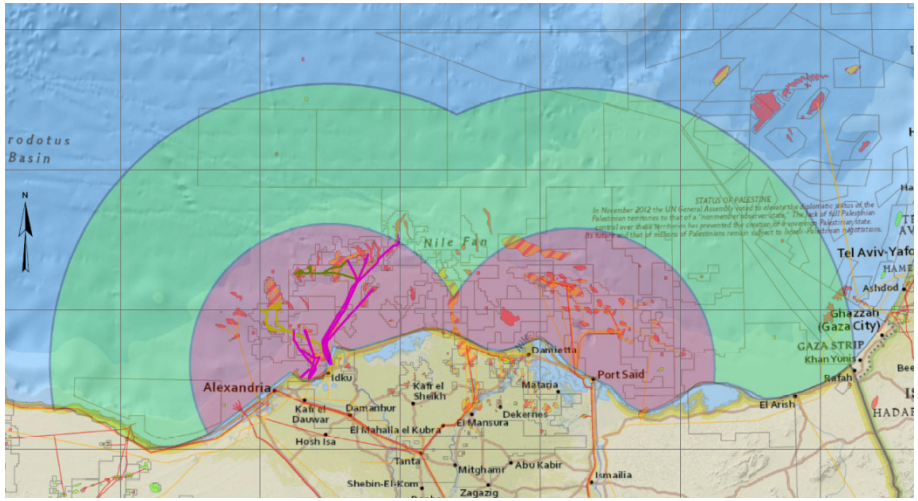

Separator as an In-Line Tee

- A design requirement for the PDGS unit, complete with foundations and protective structure, is to allow handling by current offshore pipelay vessels.
- Generates the separation efficiency performance in relation to FA criteria to facilitate dry gas behaviour.
- No moving parts
- **Details removed – please contact INTESCEA for information**

Summary

- Value proposition:
  - Increase the geographical reach from existing LNG terminals to allow them to prolong their production life and process more gas without the need for expensive subsea processing technology or surface topside equipment
- PDG system benefits:
  - Doubling the distance of subsea gas tiebacks (200km to 300km) by the means of backpressure reduction on wellhead
  - Increase in recoverable reserves:
    - Turndown ratios are removed as a natural constraint on the system
    - Line size optimised to reduce frictional losses
  - Reduction in CAPEX upwards of 40-60% over alternative concepts
  - Highly accommodating to brownfield development scenarios

Thank you – any questions?

Advisian
WorleyParsons Group

INTECSEA
WorleyParsons Group

lee.thomas@intecsea.com

richard.luff@intecsea.com